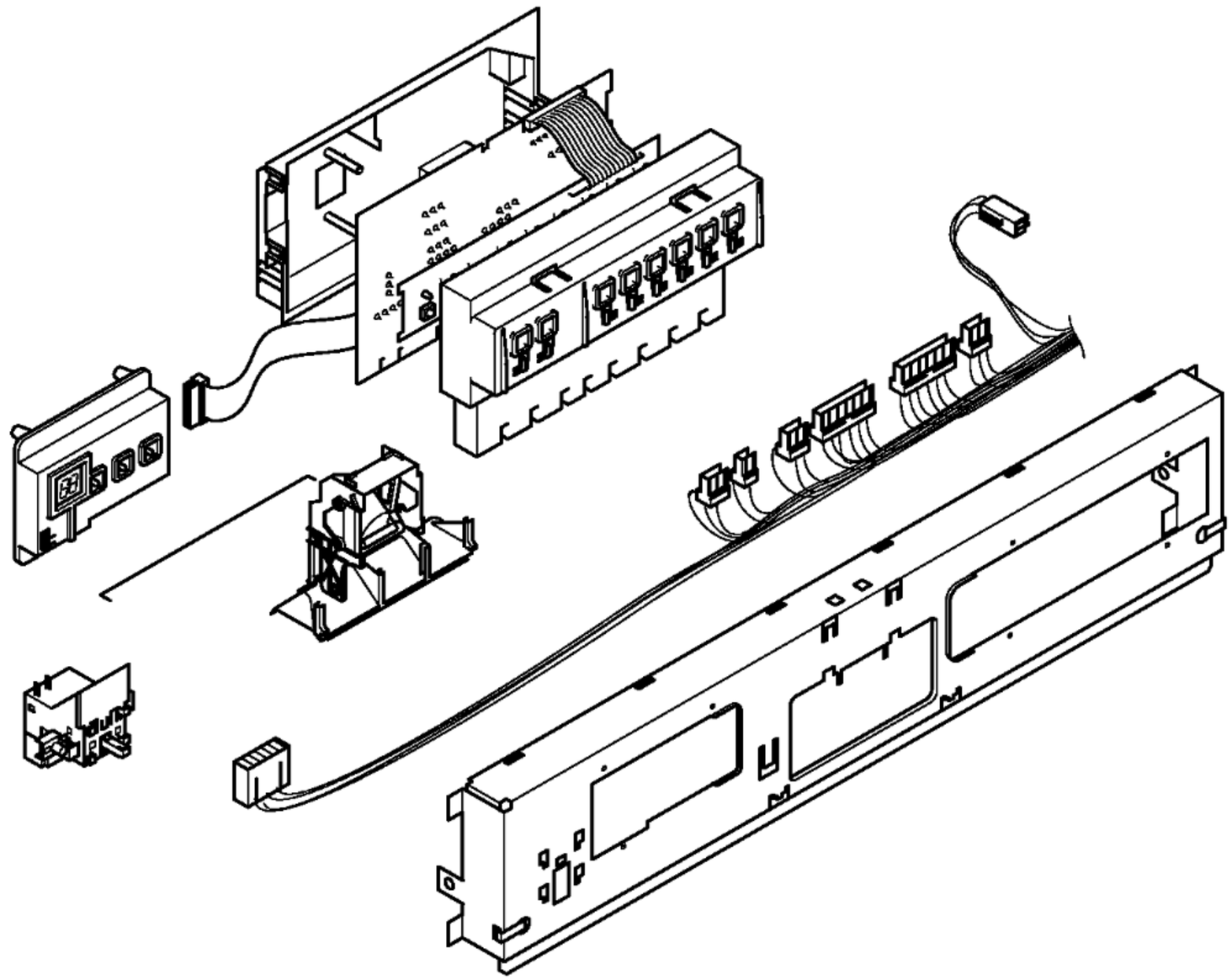

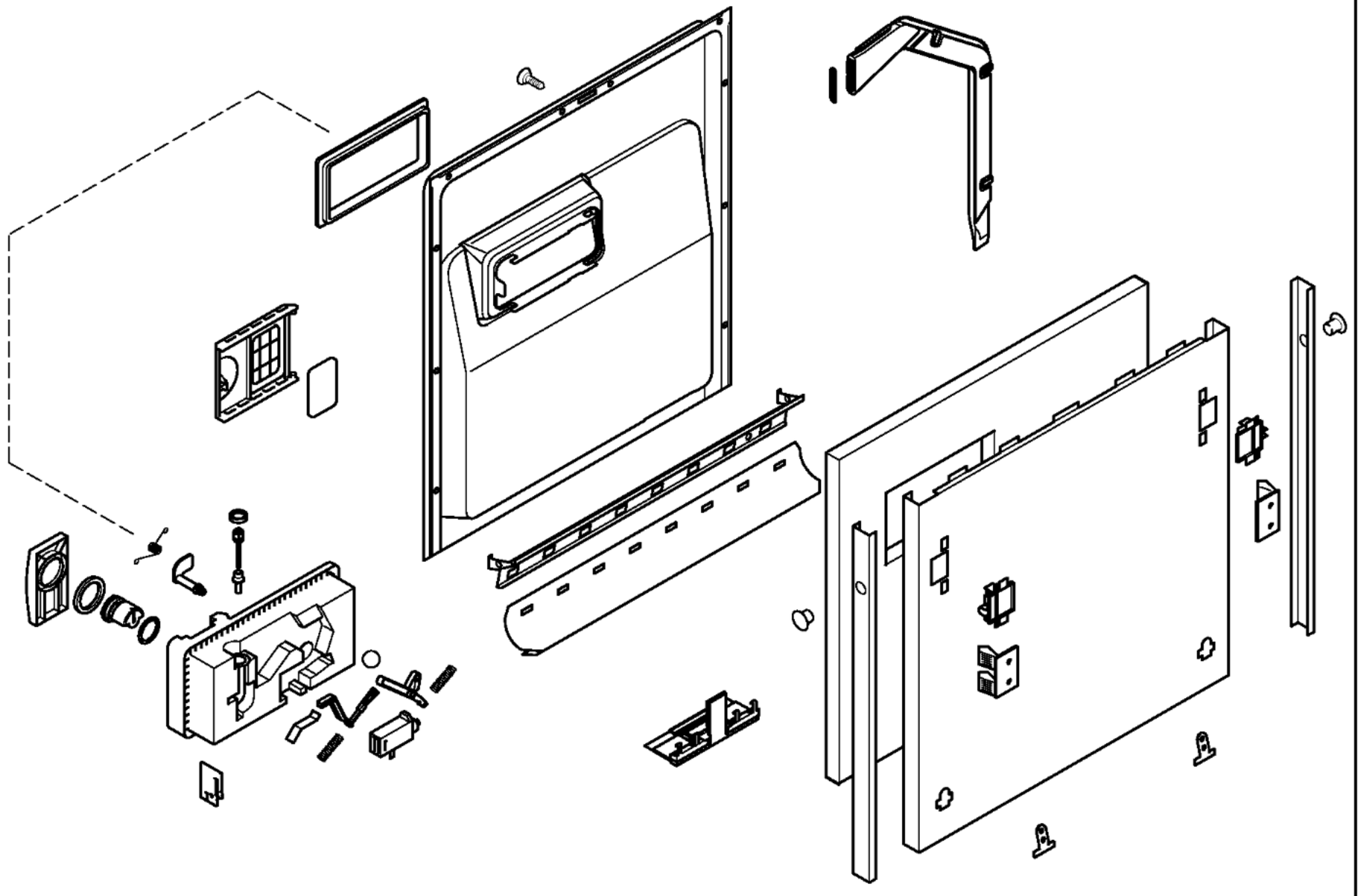

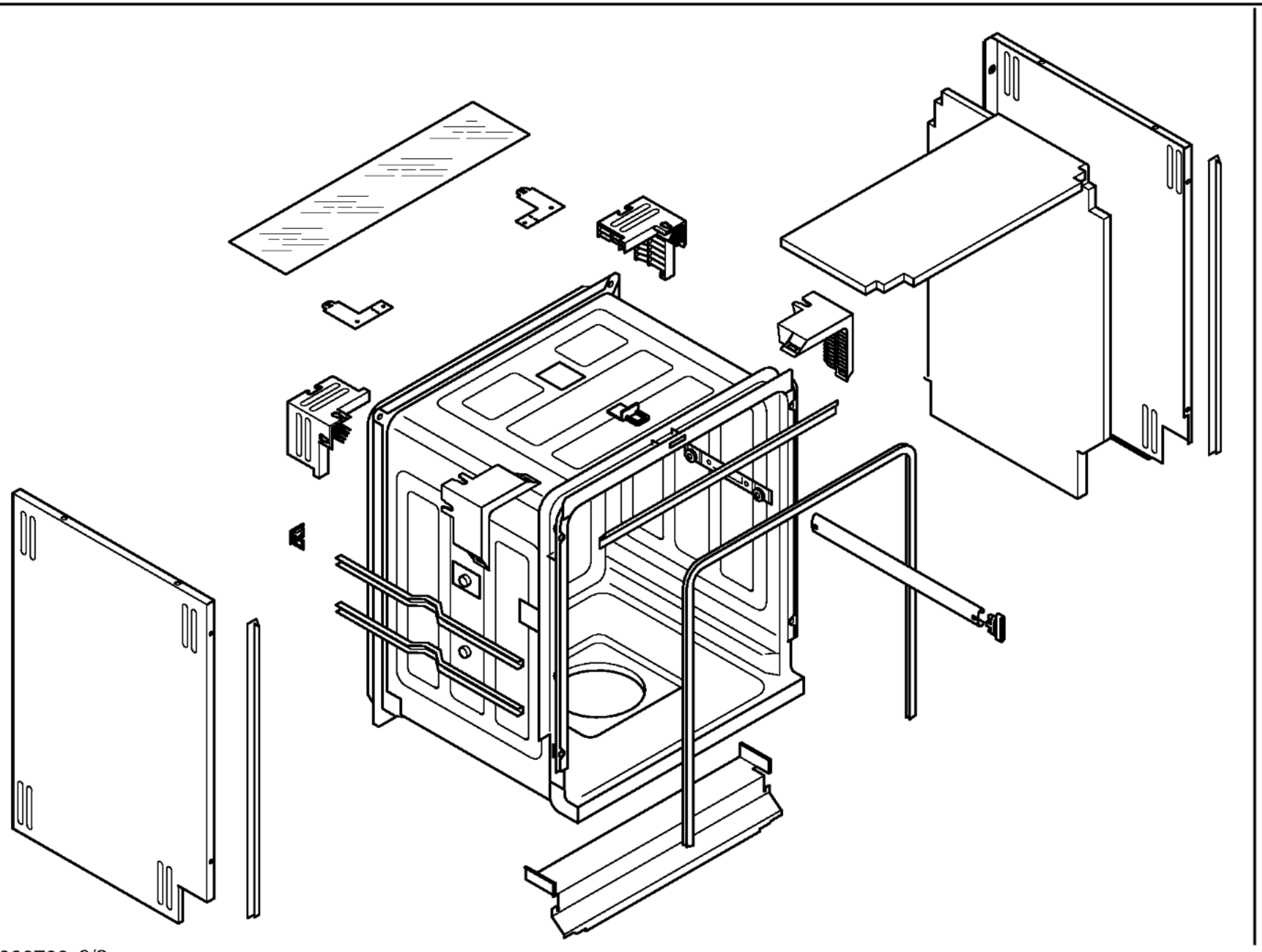
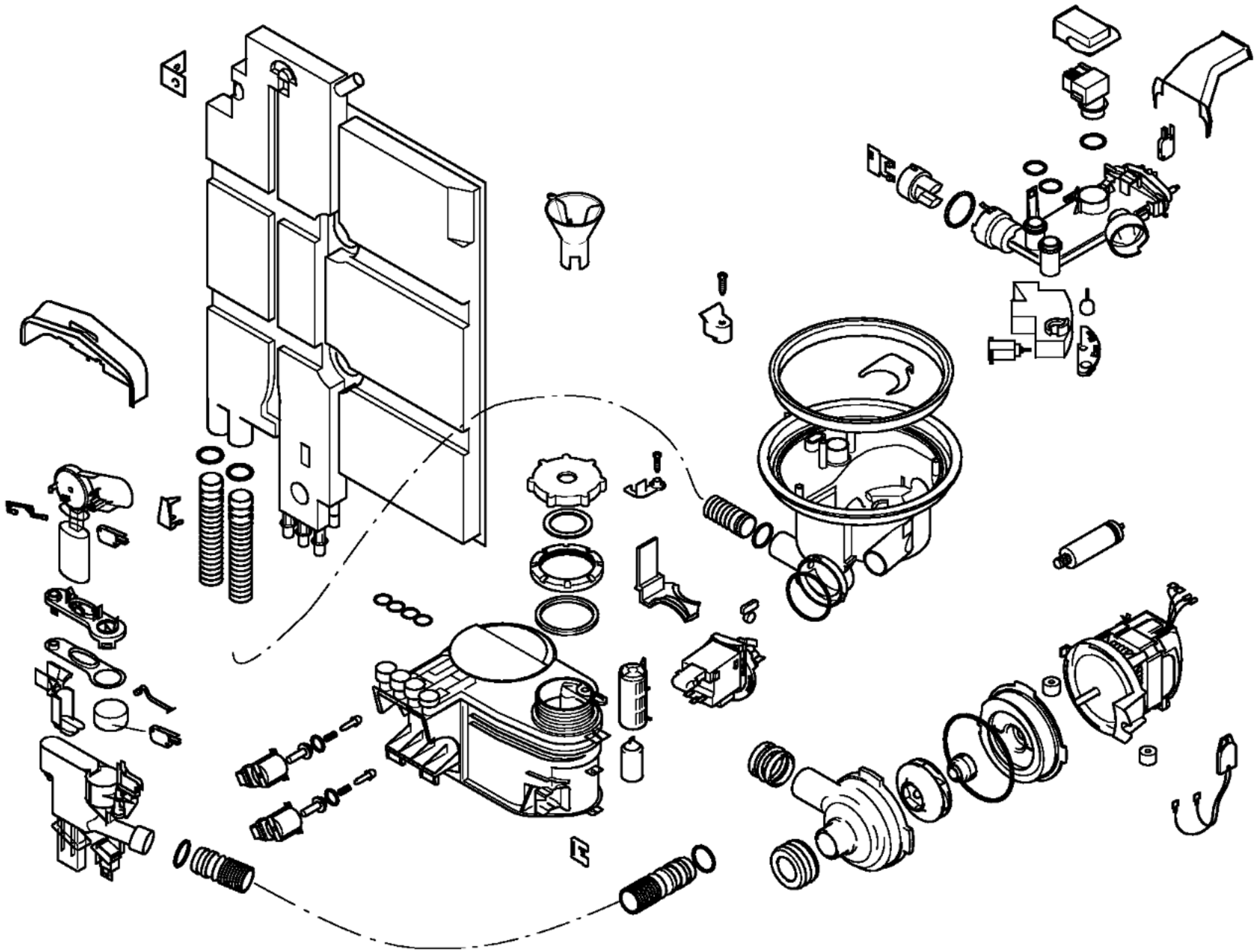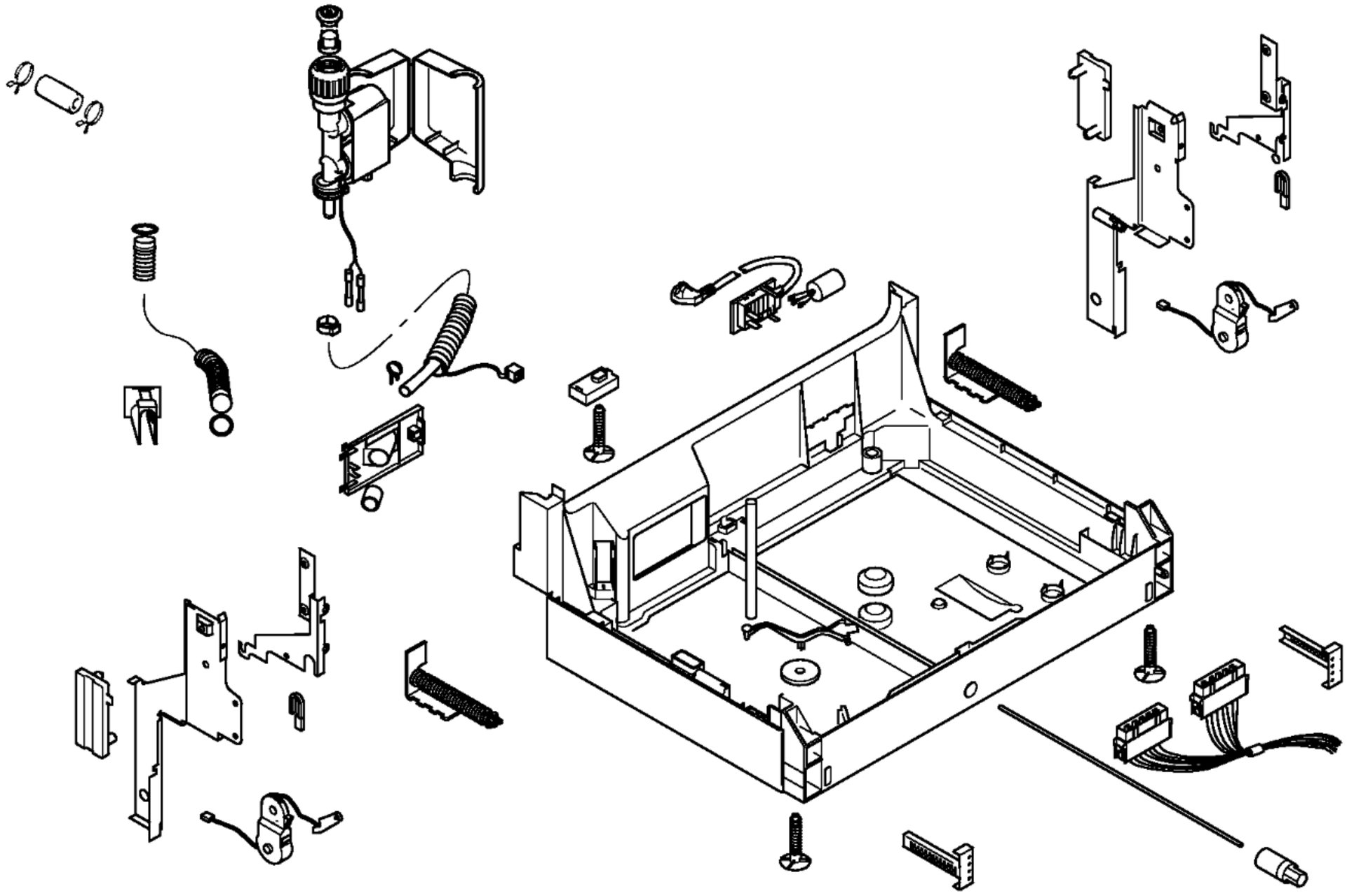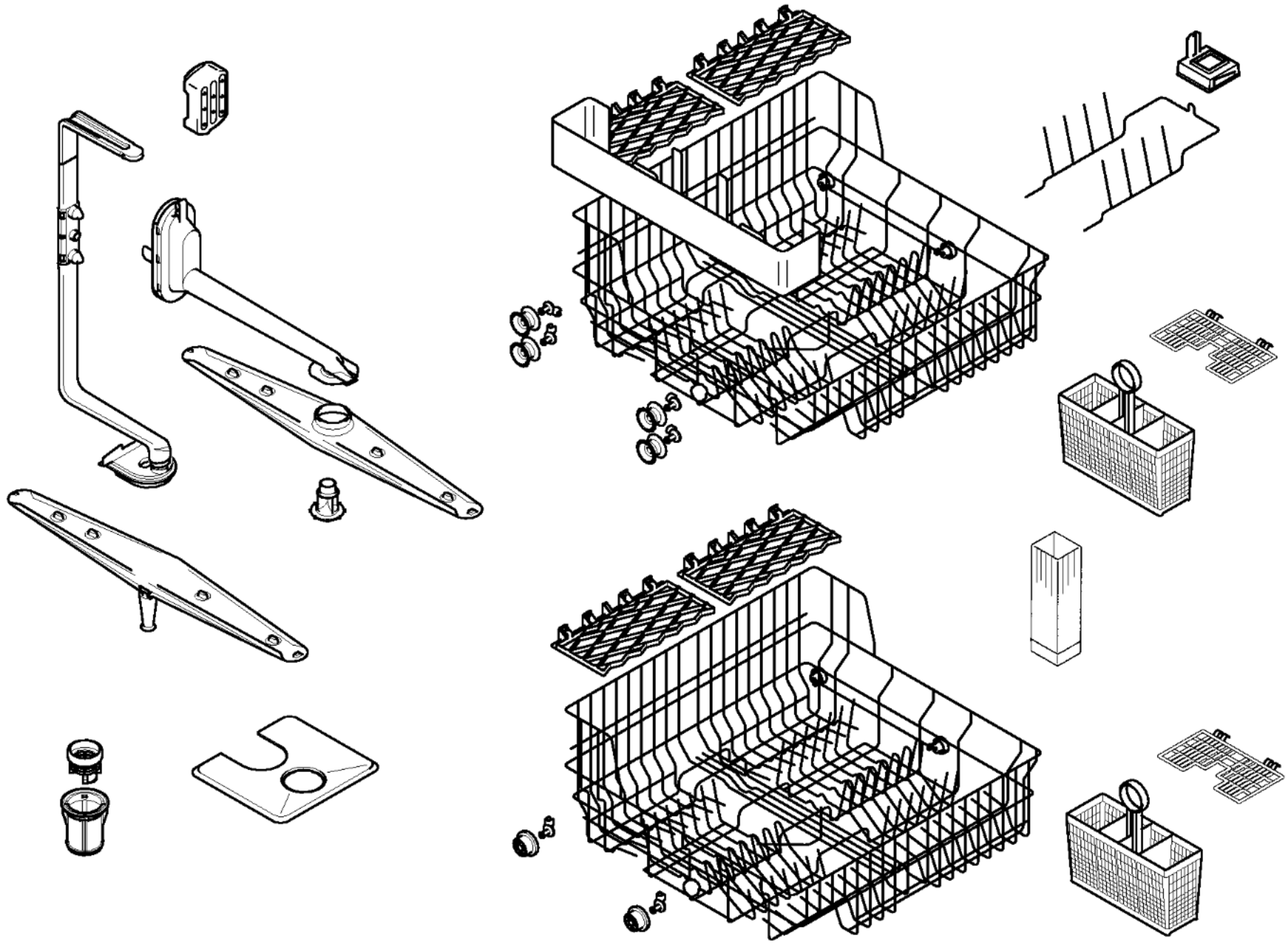
e960708-6/3