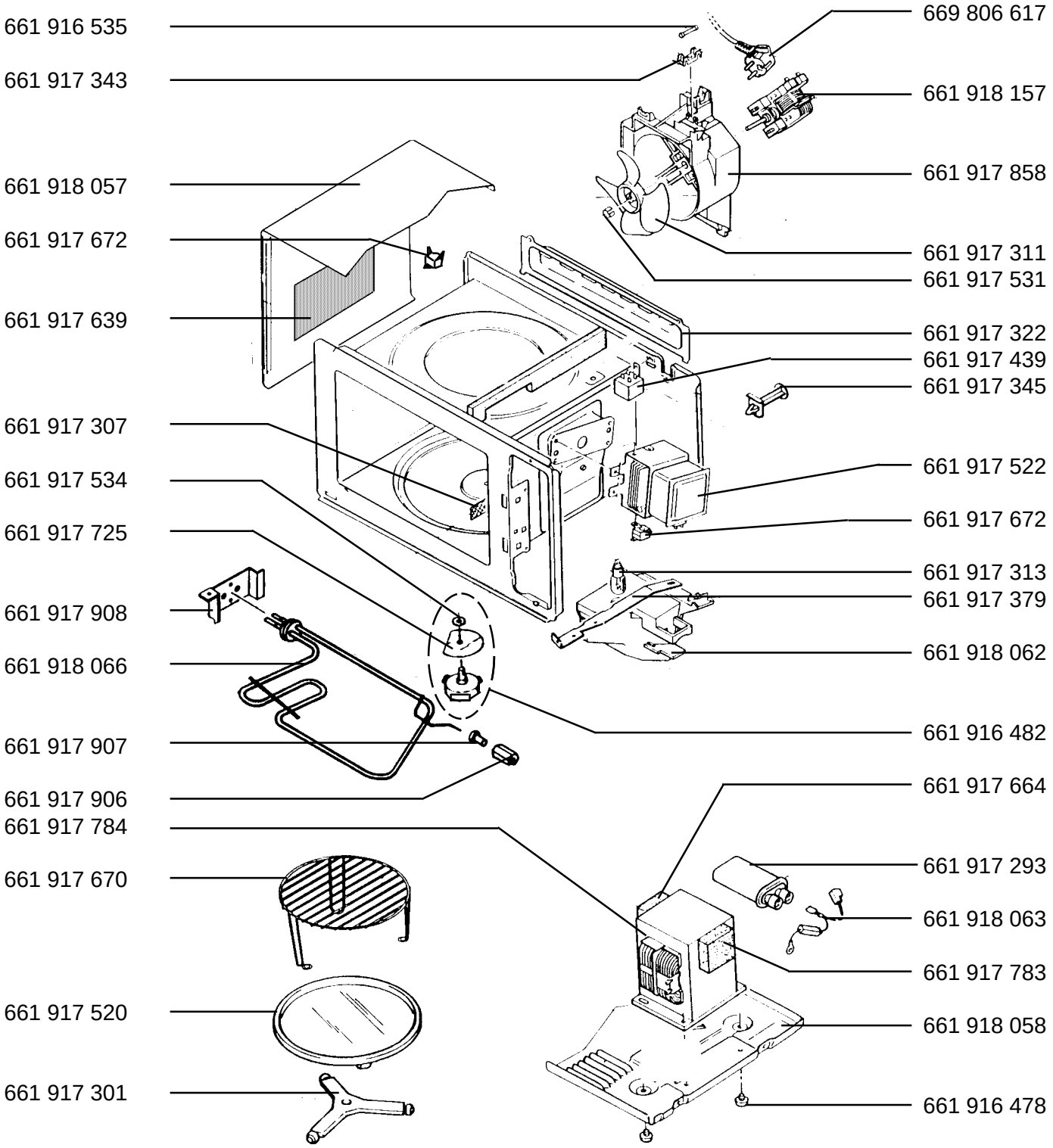**MICROMAT** DUO 21V-w E-Nr. 611 875 922 FR