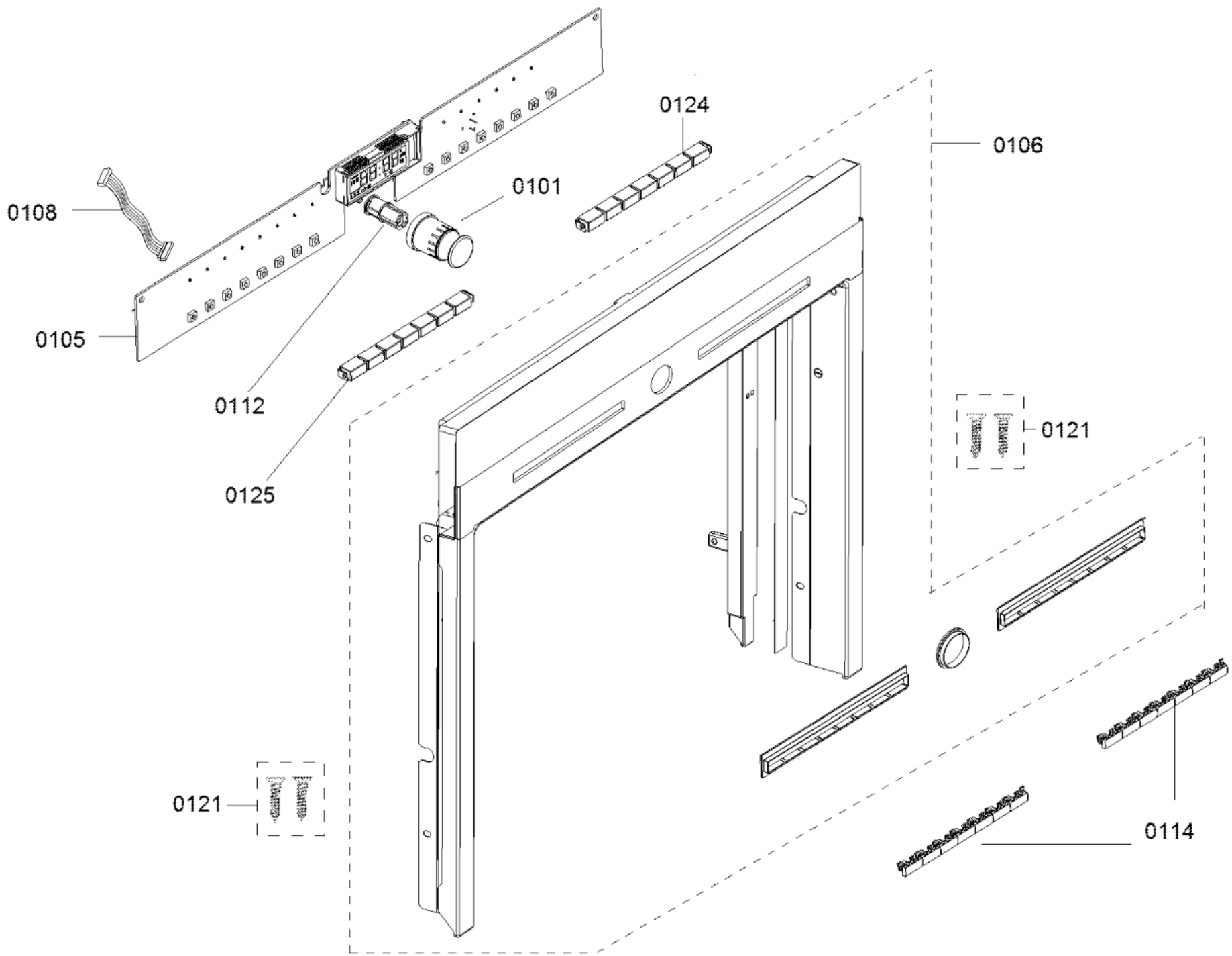

58300000135770 aet 000 e 1/4

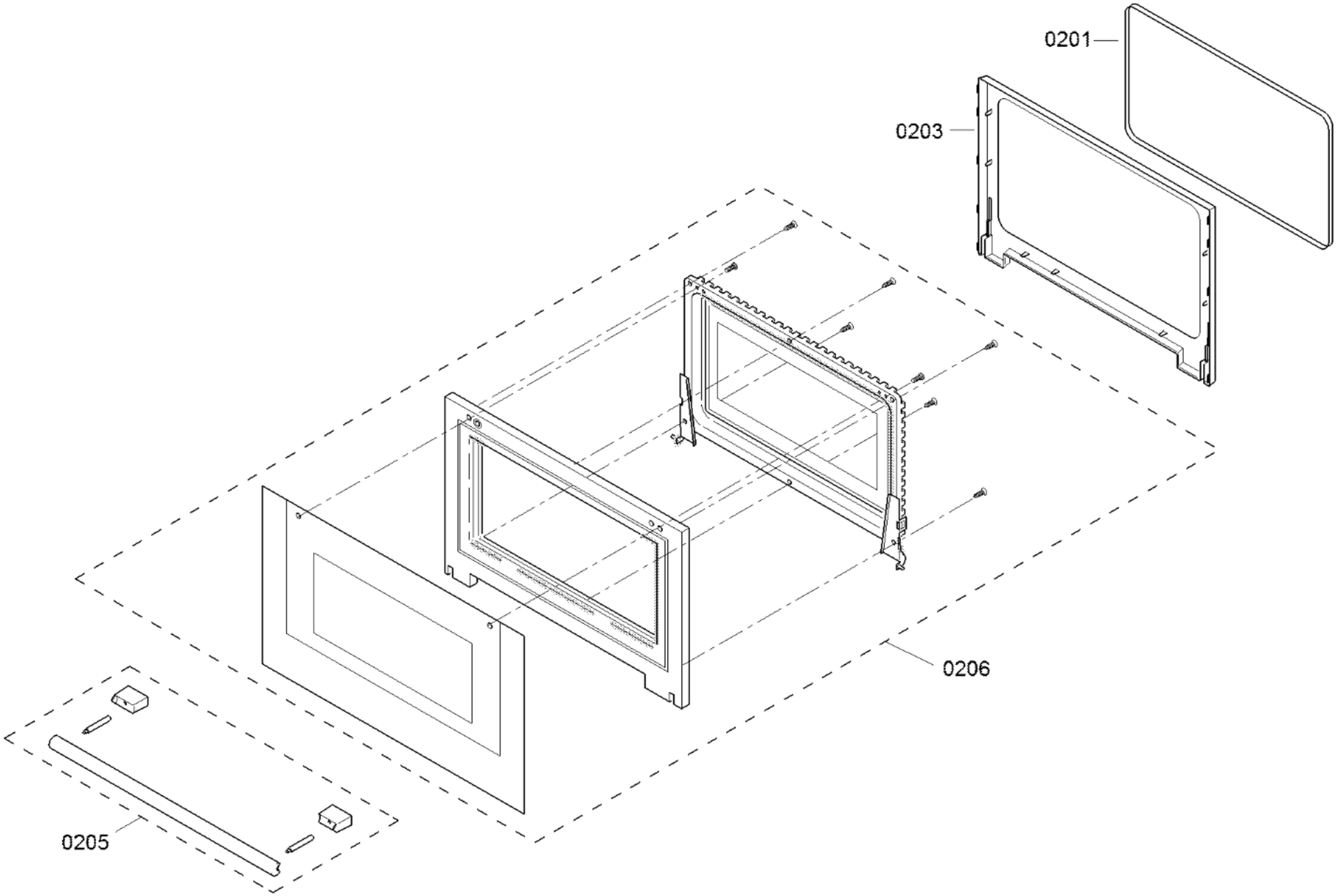

58300000135770 aet 000 e 2/4

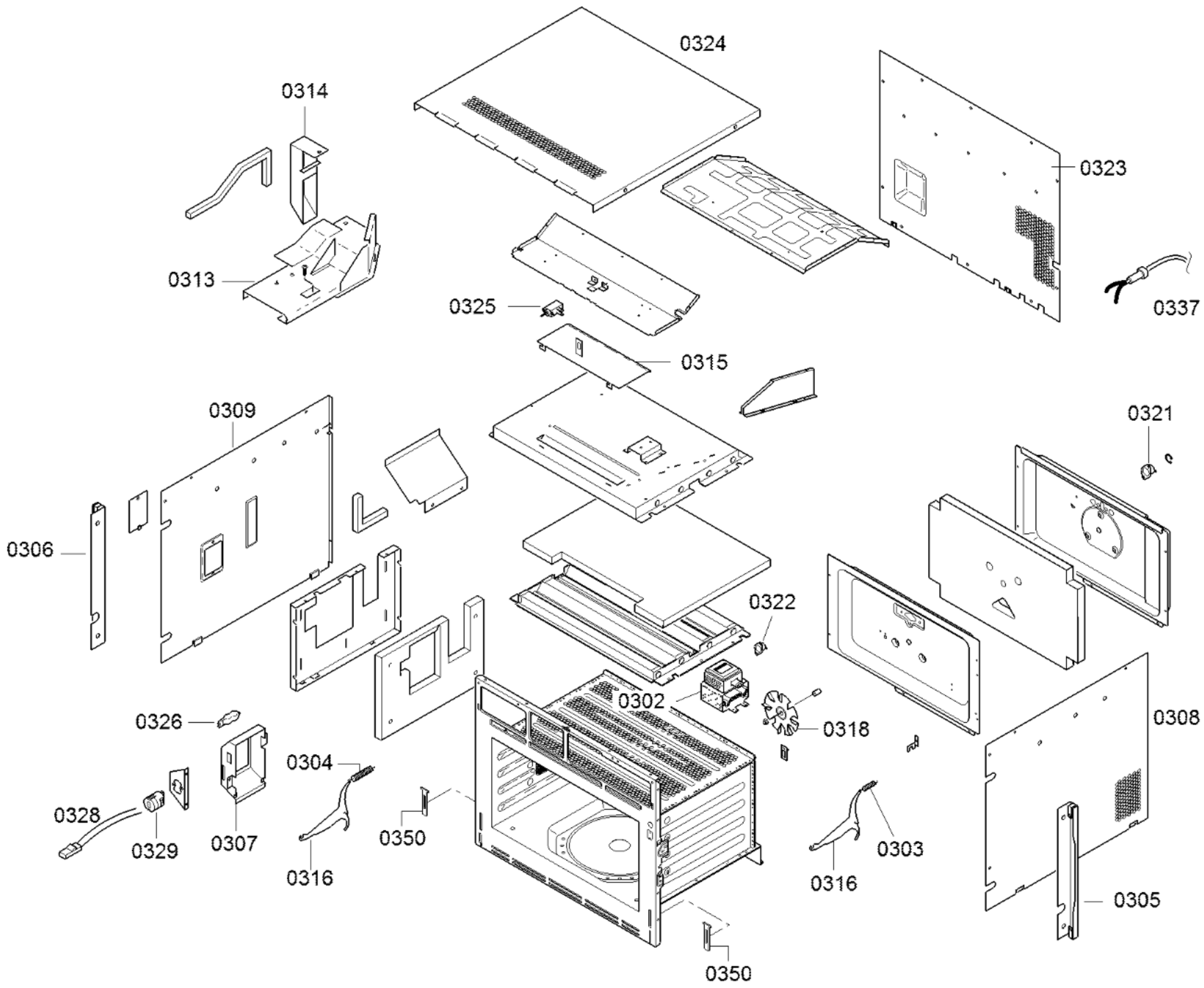

58300000135770 aet 000 e 3/4

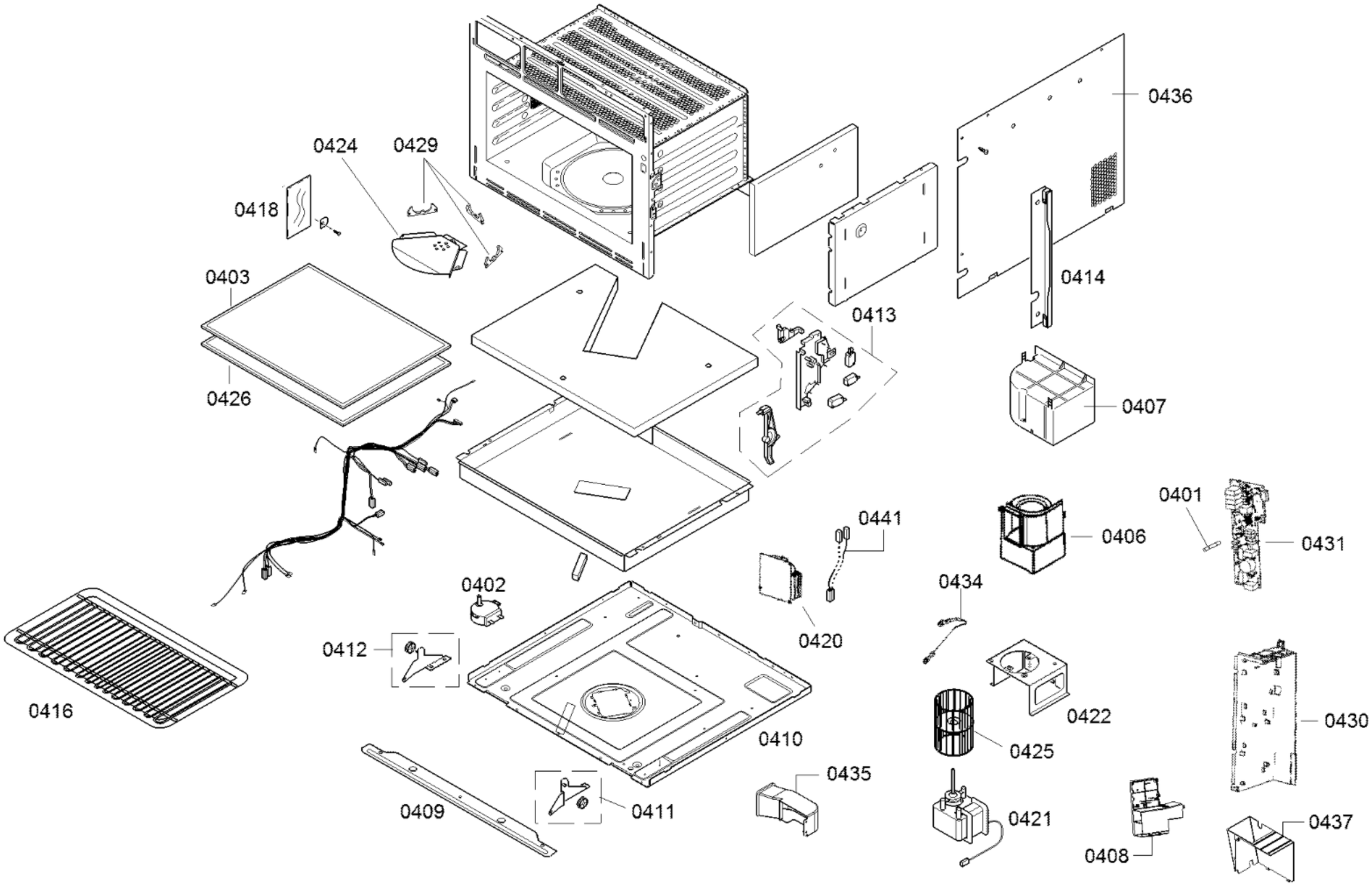

58300000135770 aet 000 e 4/4